LOGICONVERTER

UTILITY CONTROL INTERFACE

HENRY ENGINEERING
503 Key Vista Drive
Sierra Madre, CA 91024
tel: 626.355.3656
fax: 626.355.0077
website: www.henryeng.com

DESCRIPTION

LogiConverter is a logic interface unit that facilitates control of studio, AV, and similar equipment. LogiConverter creates isolated SPST relay outputs from opto-isolated logic-level input signals. Four channels of interface are provided. They can operate independently (for "start-only" use) or in pairs (for "start-stop" use). Each channel can be user-programmed to generate momentary or maintained relay closure outputs, with several modes of input control.

INSTALLATION

Connection to the four LogiConverter inputs is via the 15-pin D connector. All inputs are opto-isolated. Input voltages should be between 5 and 24 VDC. For connection to external contact closures, or equipment that provides "open collector" (ground-sink) interface, connect the + input to any +12V terminal. Connect the – input to the open collector, and connect any LogiConverter GND pin to the emitter.

Connection to the LogiConverter relay outputs is via plug-in terminal blocks. Remove about 1/8" of insulation, insert wires into the connector, and tighten the screws. Be sure that no bare wiring is exposed.

PROGRAMMING

LogiConverter has 24 possible modes of operation….read carefully!

The four input/output channels can operate independently ("start-only") or in pairs ("start-stop", or "set-reset").
If start-stop operation is selected, channels 1 & 2 are paired, and channels 3 & 4 are paired. The various modes are programmed using the 8 dip switches, SW1 thru SW8, accessible from the front of the unit. They function as follows:

SW1	Selects input mode of Chan. 1	SW5	Selects input mode of Chan. 3
SW2	Selects input mode of Chan. 2	SW6	Selects input mode of Chan. 4
SW3	Selects output mode of Chan. 1	SW7	Selects output mode of Chan. 3
SW4	Selects output mode of Chan. 2	SW8	Selects output mode of Chan. 4

SW1 thru SW4 affect channels 1 & 2; SW5 thru SW8 affect channels 3 & 4 in the same ways.

Each channel has an "input mode" switch. Since channels 1 & 2 can operate as a pair, these switches affect *both* inputs.

For independent ("start-only") operation, <u>both SW1 and SW2 must be OFF</u>. An input at Chan. 1 will produce an output at Chan. 1. An input at Chan. 2 will produce an output at Chan. 2. There is <u>no interaction.</u>

There are two modes of paired ("start-stop") operation: non-latching and latching. If non-latching operation is selected, an input at Chan. 1 will cause an output at Chan. 1. <u>Removing</u> the input from Chan. 1 will cause an output at Chan. 2. This mode is recommended for maintained (continuous) input signals only. To select this mode, SW1 should be OFF, and SW2 should be ON. (The Chan. 2 input is not used in this mode.)

If latching operation is programmed, an input at Chan. 1 will cause an output at Chan. 1. Additional inputs to Chan. 1 will produce <u>no</u> output; an input to Chan 2 must be applied to <u>reset the latch,</u> which will also cause an output on Chan. 2. To select this mode, <u>both SW1 and SW2 must be ON.</u> (SW5 and SW6 have the same effects on input channels 3 and 4.)

Each channel has an output mode switch. If SW3 is OFF, the Chan 1. output will be a momentary closure (pulse). If SW3 is ON, the relay closure will be maintained for the duration of the input signal. SW4 affects Chan. 2 in the same way, as does SW7 for Chan. 3 and SW8 for Chan. 4.

D CONNECTOR PIN-OUTS FOR INPUT WIRING

PIN 1	Input 1, +	PIN 7	Input 4, +	PIN 13	+12V
PIN 2	Input 1, -	PIN 8	Input 4, -	PIN 14	GND
PIN 3	Input 2, +	PIN 9	+12V	PIN 15	+12V
PIN 4	Input 2, -	PIN 10	GND		
PIN 5	Input 3, +	PIN 11	+12V	All inputs: 5 to 24 VDC,	
PIN 6	Input 3, -	PIN 12	GND	200 ms minimum length	

HENRY ENGINEERING

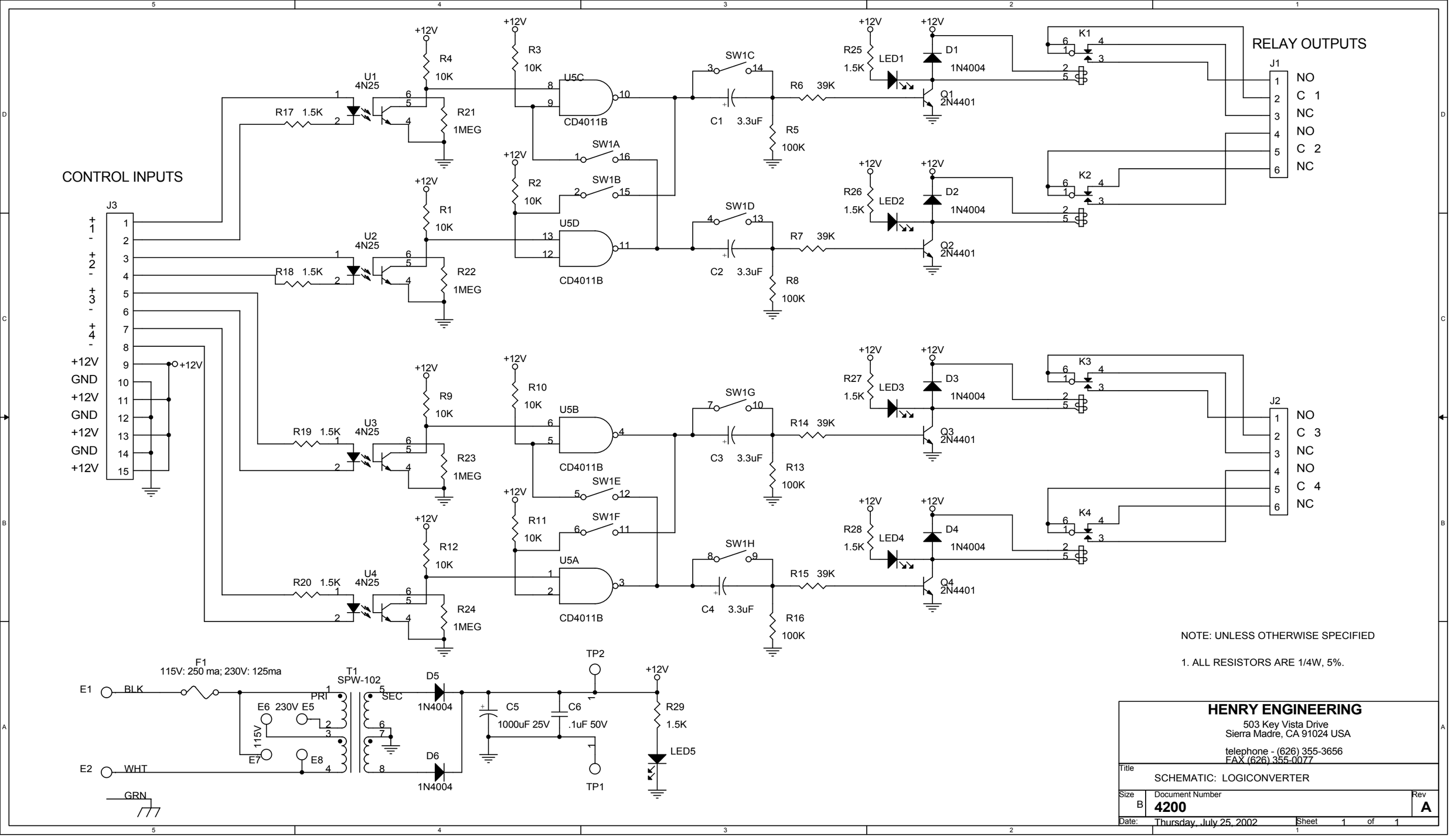

NOTE: UNLESS OTHERWISE SPECIFIED

1. ALL RESISTORS ARE 1/4W, 5%.

HENRY ENGINEERING
503 Key Vista Drive
Sierra Madre, CA 91024 USA
telephone - (626) 355-3656
FAX (626) 355-0077

Title	SCHEMATIC: LOGICONVERTER	
Size B	Document Number 4200	Rev A
Date: Thursday, July 25, 2002	Sheet 1 of 1	